DocuSign Envelope ID: 35A0DA49-41E0-4F81-9F7D-715D9DF0C55E

PLANS PREPARED BY:
WSP USA
434 FAYETTEVILLE STREET
SUITE 1500
RALEIGH, NC 27601
TEL: 1.919.836.4040
FAX: 1.919.836.4099
LICENSE NO. F-0165

PROJECT REFERENCE NO.	SHEET NO.
EB-5858	2A-1

ROADWAY DESIGN ENGINEER
2/27/2023
NORTH CAROLINA PROFESSIONAL SEAL 33290 ENGINEER RONELL A. THIGPEN
DocuSigned by: Ronell Thigpen
9C2B41A2DB5E447...

DOCUMENT NOT CONSIDERED FINAL UNLESS ALL SIGNATURES COMPLETED

PAVEMENT SCHEDULE	
J	PROP. 6" AGGREGATE BASE COURSE.
T	EARTH MATERIAL
V	2" GRANITE SCREENING

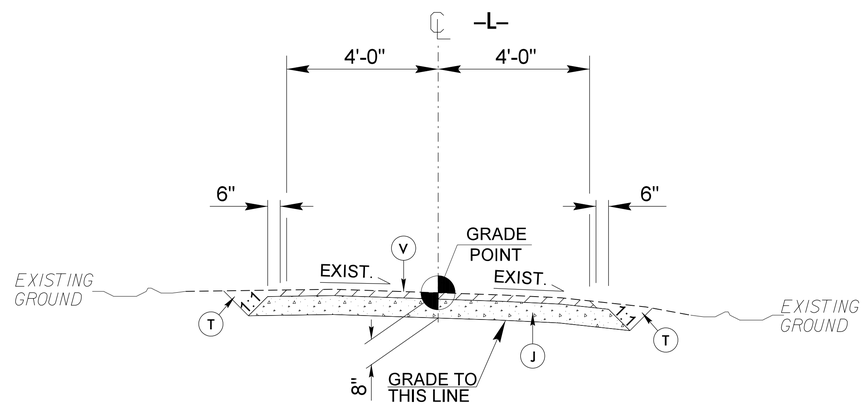

TYPICAL SECTION 1 (TRAIL)

–L– STA. 13 + 47.17 TO STA. 14 + 50.00

6/2/99
2/27/2023
J:\LSC2005263.014 EB5858 Brevard Pedestrian Bridge\Engineering\References\Roadway\Proj\EB5858_rdy_2A-1.dgn
Kimrwa